PART NUMBER N10360GX

ITEM NO.	PART NUMBER	DESCRIPTION	QTY.
1	10078	SHAFT - IMPELLER PUMP	1
2	04306	BALL BEARING	1
3	09907	COVER	1
4	09909	IMPELLER PUMP BODY	1
5	10416C	IMPELLER HOUSING	1
6	04304	RETAINING RING	1
7	10522C	MECHANICAL SEAL TYPE 21	1
8	10462C	FLOATING SEAL SEAT	1
9	09919	#10-32 SLOTTED SCREW	10
10	09917	IMP PUMP GASKET - FRONT	1
11	09918	IMP PUMP GASKET - REAR	1
12	02075	BUSHING - GRAPHITE	1
13	09921	#10-32 x 7/8 FHCS	1
14	12710	LOCKWASHER	10
15	01311	DOWEL PIN	4
16	10077	IMPELLER	2
17	10093	#304 KEY	2
18	10079	WEAR PLATE	1
19	10134	CAM	1
20	00336	PLUG	3
21	00528	PIN - CRS	1
22	09913	DRIVE COUPLING	1
23	13285	TAG	1
24	23083	LABEL	1
25	18388	PLUG - PLASTIC	4

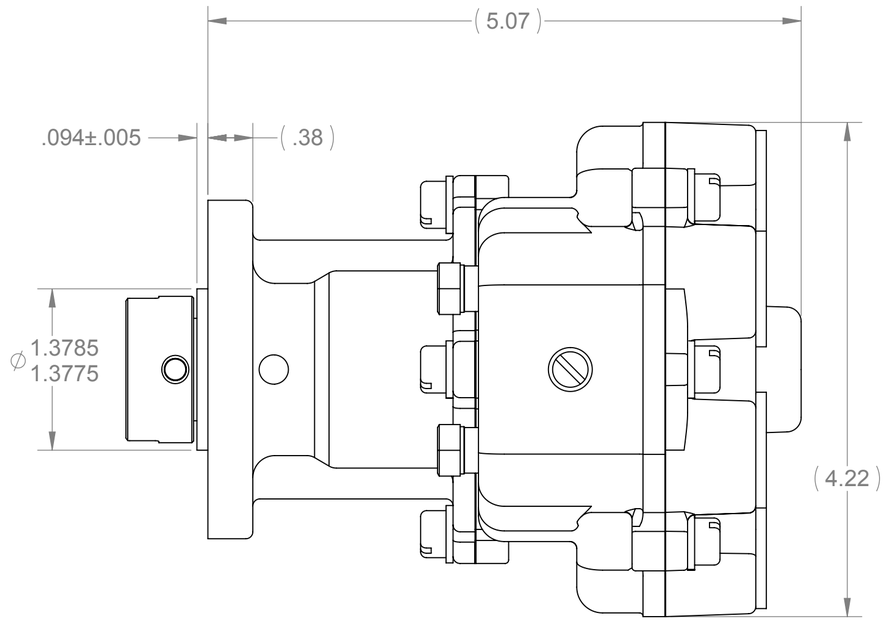

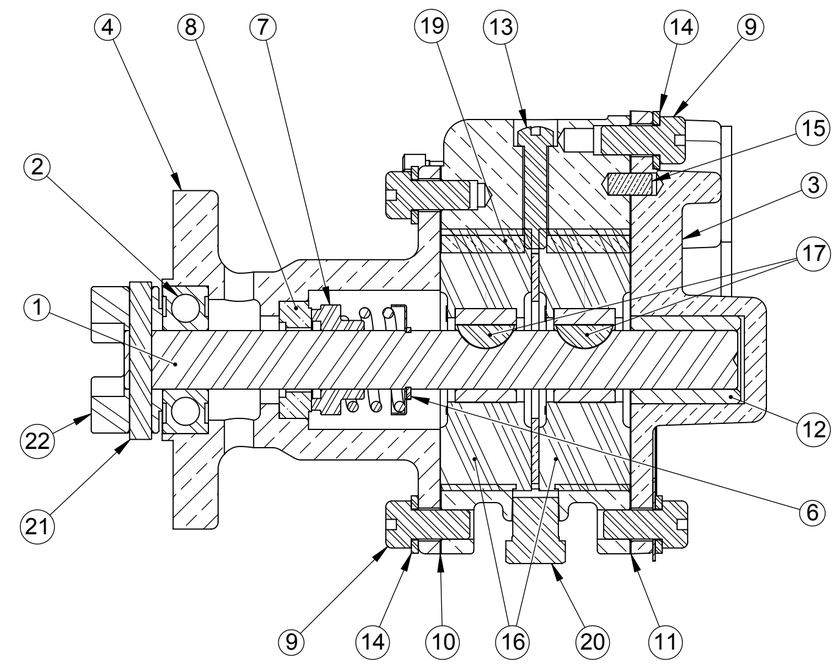

SECTION A-A

NOTES:

1. APPLY A BEAD OF PERMATEX AROUND THREADED HOLE IN CAM PRIOR TO ASSEMBLY, ITEM 19.
2. USE PAC-EASE, OR EQUIV, TO AID IN ASSEMBLY OF MECHANICAL SEAL, ITEM 7, TO SHAFT, ITEM 1.
3. USE GREEN LOC-TITE, OR EQUIV, ON INSIDE DIA OF BALL BEARING, ITEM 2, AND SHAFT, ITEM 1.
4. STATIC TEST TO 30 PSI.
5. PRINT MODEL NUMBER AND DATE CODE ON LABEL,ITEM 24, AND ATTACH TO TAG, ITEM 23.

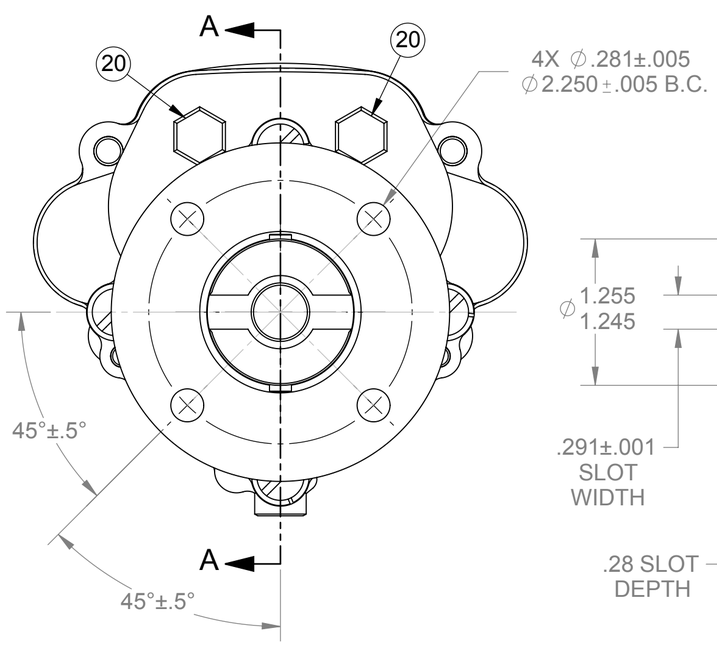

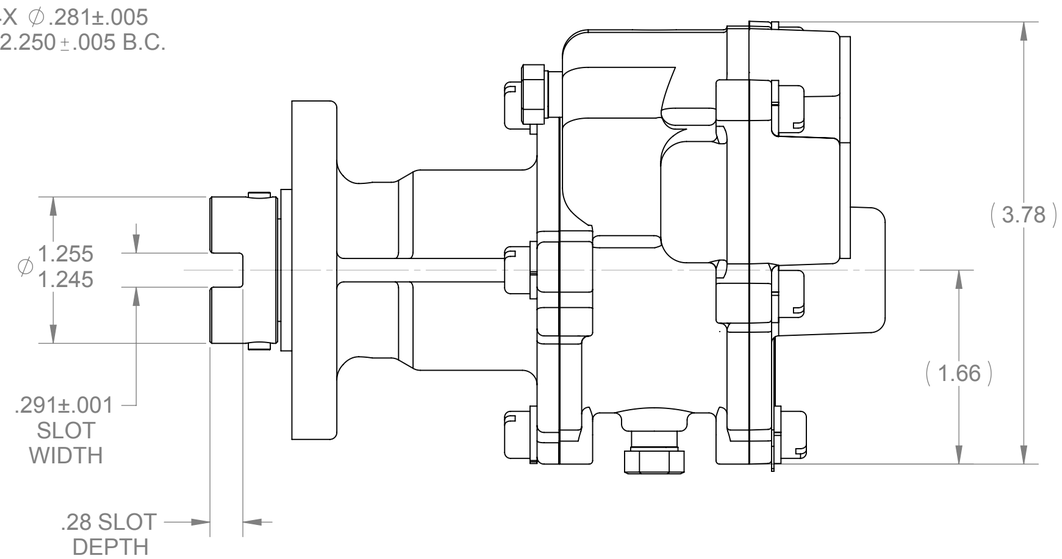

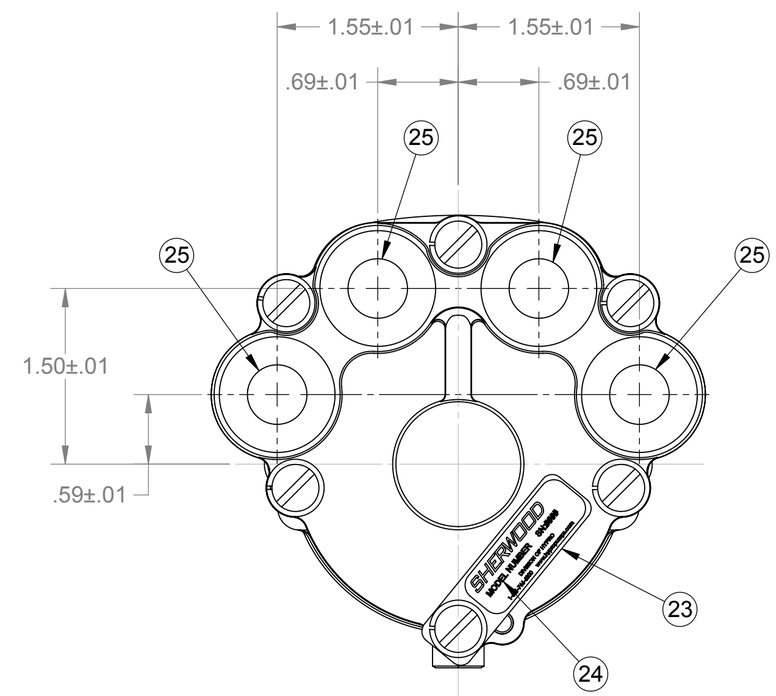

REV.	ECN	REVISION DESCRIPTION	CHKD	DATE
H	6701	ITEM 20, 00336 PLUG, WAS QTY 2. REDRAWN ON NEW FORMAT	PEB	2/22/2008

SHERWOOD
A Div. of Hypro Corporation A PENTAIR COMPANY
375 Fifth Avenue NW, New Brighton, MN 55112, (651) 766-6300

DRAWING BASED ON ASME Y14.5M-1994 | DO NOT SCALE PRINT | SIZE C
THIRD ANGLE PROJECTION | SCALE 1:1 | SHEET NUMBER 1 OF 1

REPLACES PART NO. | REV.
DWG BY: KB DATE: 8/7/1986
CHECKED BY: DATE:
APPROVED BY: DATE:

THIS DRAWING IS THE PROPERTY OF HYPRO, AND WITHOUT WRITTEN AUTHORIZATION, MUST NOT BE COPIED OR COMMUNICATED

PART DESCRIPTION: IMPELLER PUMP ASSY
PART NUMBER: N10360GX | REV. H